(6) Wehr, T.; Zhu, M.; Rodriguez, R.; Burke, D.; Duncan, K. *Am. Biotechnol. Lab.* **1990**, *8*, 22-29.
(7) Kilar, F.; Hjerten, S. *Electrophoresis* **1989**, *10*, 23-29.
(8) Zhu, M.; Hansen, D. L.; Burd, S.; Gannon, F. *J. Chromatogr.* **1989**, *480*, 311-319.
(9) Righetti, P. G. *Isoelectric Focusing: Theory, Methodology and Applications*; Elsevier Press: Amsterdam, 1983.
(10) Pawliszyn, J. *Anal. Chem.* **1986**, *58*, 243-246.
(11) Pawliszyn, J. *Rev. Sci. Instrum.* **1987**, *58*, 245-248.
(12) Fuller, E.; Schettler, P.; Giddings, J. *Ind. Eng. Chem.* **1986**, *58*, 19-23.
(13) Cobb, K. A.; Novotny, M. *Anal. Chem.* **1989**, *61*, 2226-2231.
(14) Cheng, Y. F.; Dovichi, N. J. *Science* **1988**, *242*, 562-564.

RECEIVED for review July 25, 1991. Accepted October 18, 1991. This work was supported by the Natural Sciences and Engineering Research Council of Canada.

CORRESPONDENCE

Universal Detection for Capillary Isoelectric Focusing without Mobilization Using a Concentration Gradient Imaging System

Downloaded via VILLANOVA UNIV on September 8, 2020 at 12:49:51 (UTC).
See https://pubs.acs.org/sharingguidelines for options on how to legitimately share published articles.

Sir: Isoelectric focusing (IEF) has been widely employed for separation of proteins based on differences in their isoelectric points (p*I*) (*1*). Recently, the development of capillary electrophoresis (CE) techniques has generated interest in performing this separation method in capillaries, since efficient dissipation of Joule heat from the 10–100 μm diameter capillary eliminates convection effects and enables highly efficient separations (*2*). Since 1985, there have been many reports on the developments of isoelectric focusing procedures performed inside capillaries (*3–5*). In a conventional capillary IEF system, focused zones must be moved through the flow cell, which is usually located at one end of the capillary, by the mobilization process which follows the focusing step (*5*). During the mobilization process, distortion of zones and the loss in resolution are unavoidable. The mobilization process also takes ~20 min compared to a few minutes required for focusing (*5*), which makes the capillary IEF a relatively slow separation method compared to other capillary electrophoretic techniques. Therefore an imaging on-line detection method is critical to improve the speed and performance of this separation technique.

Several on-line scanning spectroscopic and radiometric detection methods have been developed for electrophoresis performed on slabs (*2, 6*). However, they cannot be directly used with the electrophoresis carried out in microbore capillaries because of their small size. Recently there were attempts made to continuously monitor capillary IEF separation. Photographs of the focusing process of blue dye stained proteins inside 0.4–0.6-mm-i.d. tubes were taken, and the focused zones of proteins could be investigated (*7*). However, this technique required labeling of the proteins and could not give good quantitative information, because of the use of photographic film. Further development of this optical absorbance technique for proteins without derivatization in narrow capillaries (10–100-μm i.d.) requires a photodiode array and a coherent light beam from a UV laser, which is very expensive and operates at limited wavelengths. The focusing process was also monitored by an electrode array detector (*8*). Although a complicated 100-electrode array was used, the resolution obtained in these experiments was very poor.

Sharply focused analyte zones are formed in the capillary IEF, which create high-concentration gradients in the system. It is logical to consider application of the concentration gradient type detector. A simple Schlieren shadowgraph system has already been used for observing the distribution of carrier ampholytes focused in the gel slabs (*9*). However, it is difficult to obtain quantitative information about analytes inside a narrow capillary by the conventional method based on incoherent light source and a screen. This situation can be dramatically improved by using modern optical instruments, such as a laser and photodiodes or a photodiode array. Such a single-point concentration gradient detection system (*10*) has proven to be a sensitive, universal, and inexpensive detector for the CE techniques (*11–13*) and has also been demonstrated to be a suitable detector for the high-performance capillary IEF (*14*). Therefore, a concentration gradient imaging system along the capillary is also expected to be a powerful tool for on-line monitoring and detection. In this report, the feasibility of capillary IEF with such an imaging system was demonstrated by performing separations of proteins inside a 100 μm i.d. square capillary.

EXPERIMENTAL SECTION

Instrumental Procedures. A 100 μm i.d., 6.5 cm long square glass capillary (Dynamics Inc. Rockaway, NJ) was used for spearation. The capillary inner wall was coated with non-cross-linked acrylamide to eliminate electroosmosis by the reported method (*4*). The cartridge holding the capillary and the high-voltage dc power supply were the same as those of previous experiments (*14*). The cartridge was mounted on a two-axis stage, the tilt angles of which were adjustable in the horizontal plane and in the vertical plane, so that the probe beam could be easily focused into the capillary.

As shown in Figure 1, a laser beam from a He–Ne laser (Uniphase, San Jose, CA) was used as the probe beam. The probe beam was expanded to a 2 cm diameter beam spot, and then it was focused into the capillary by a 6 mm focal length cylindrical lens, which was mounted on a three-axis stage. A 20 cm diameter probe beam spot in the detector plane was formed by a 25 mm focal length lens mounted just behind the capillary. In this way, 1-cm length in the detector plane corresponded to a 1-mm length of the capillary, and the probe beam intensity profile could be measured in the detector plane. A photodiode was used to measure the light intensity profile in the detector plane, and a 0.1-mm slit was placed before it. The photodiode was mounted on a one-axis stage driven by the moving part of a syringe pump (Model 341B, Orion Research Inc. Cambridge, MA), so that it could scan in the detector plane. The scanning distance of this system was ~150 mm, which corresponded to a 15-mm length on the capillary. The probe beam intensity profile was also measured by a photodiode array of 128 pixel (Type S2301-128Q, Hamamatsu, Hamamatsu City, Japan), by which fast electrophoretic processes in the capillary could be recorded. The whole detection system was mounted on a vibration isolation table. The data were collected by an IBM DACA board, in a PC-AT personal computer, using the software ASYST (Asyst Software Technology Inc., Rochester, NY).

 © 1992 American Chemical Society

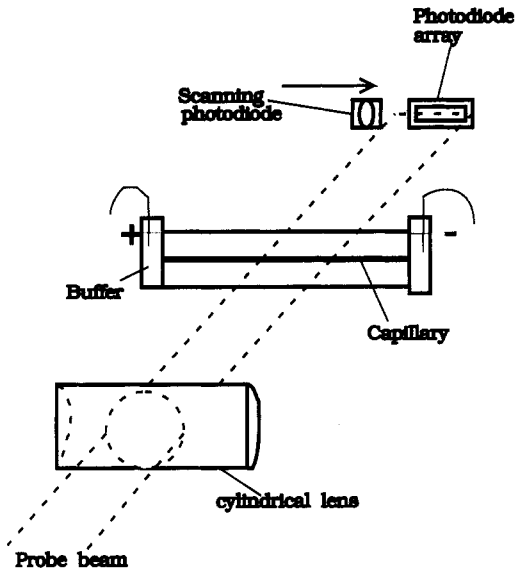

Figure 1. Diagram demonstrating the cartridge holding the capillary, and the probe beam alignment.

Reagents. All chemicals and solution preparation procedures were the same as those used in previous experiments (*14*). Samples used include α-chymotrypsin (type II, Sigma), phosphorylase *b* (Sigma), and ovalbumin (grade V, Sigma). The sample concentration introduced into the capillary ranged from 0.5 to 1 mg/mL.

IEF Process. The samples were introduced into the capillary by pressure generated by a syringe. A plug of a 1% agarose gel in the reservoir of the anodic end of the capillary (prepared in the anolyte, 10 mM H_3PO_4) was used to avoid hydrodynamic flow in the 100 μm i.d. capillary. Then a 5-kV dc voltage was applied and current passing through the capillary was monitored to follow the focusing process. Typically, the current dropped from 15 μA to ~2.5 μA in 4–7 min and then became stable for hours.

Safety Considerations. A Plexiglass box should be used to isolate the anodic end of the capillary because of the high dc voltage applied to this end. Caution should be taken to prevent the laser probe beam from reflecting or scattering to the operator's eyes while the optical alignment is adjusted.

RESULTS AND DISCUSSION

Figure 2 shows the beam intensity profile detected by a single photodiode scanned across the probe beam, which passes through the part of the capillary located 3.5–5-cm distance from the anodic end. Two sharp, high peaks are observed in probe beam intensity profile shown in Figure 2, which correspond to the positions expected for the focused phosphorylase *b* (p*I* 6.3) and ovalbumin (p*I* 4.7), respectively. The concentrations of analytes are ~1 mg/mL each. This result demonstrates that the focused proteins inside the capillary can be detected by this simple imaging system.

For the optical alignment shown in Figure 1, the probe beam can be approximately decomposed into a bundle of infinitesimal light filaments. When the probe beam passes through the capillary, the individual light filaments are refracted and bent out of their original path upon encountering a refractive index gradient produced by the concentration gradient inside the capillary (*10*). This is illustrated by Figure 3. If the intensity of each filament is a constant, equaling I_0, the relative changes of the light intensity on the detector plane can be given (*15*):

$$\frac{\Delta I(x)}{I_0} = M\int_0^d \frac{\partial^2}{\partial x^2}[\log n(x)]\,\mathrm{d}z = Md\left\{\frac{1}{n(x)}\frac{\mathrm{d}^2 n}{\mathrm{d}x^2} - \left[\frac{1}{n(x)}\frac{\mathrm{d}n}{\mathrm{d}x}\right]^2\right\} \quad (1)$$

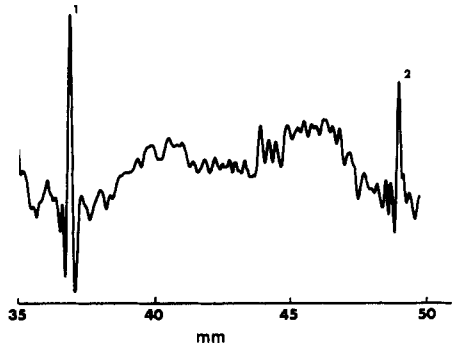

Figure 2. Images of the focused phosphorylase *b* (peak 1) and ovalbumin (peak 2). Samples concentrations, 1 mg/mL.

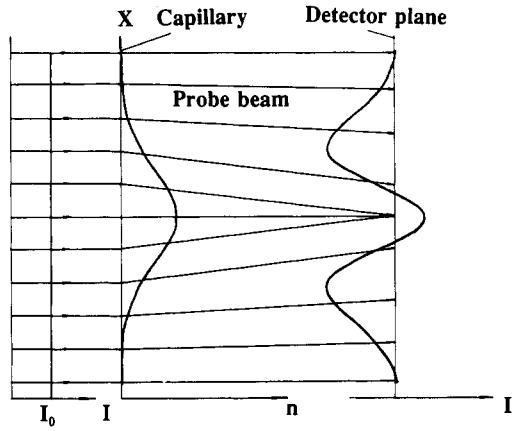

Figure 3. Principle of the imaging system.

Here, x is the direction along the capillary, z is the direction along the probe beam, n is the refractive index inside the capillary, d is the diameter of the capillary, and the M is the distance between the capillary and the detector plane. In this equation, $[1/n(x)](\mathrm{d}n/\mathrm{d}x)$ corresponds to the probe beam deflection angle and is small (*15*). Its high power in the second term of eq 1 can be neglected, compared with the first term (*15*), then

$$\frac{\Delta I(x)}{I_0} \simeq \frac{Md}{n(x)}\frac{\mathrm{d}^2 n}{\mathrm{d}x^2} \quad (2)$$

which shows that the relative changes of the probe beam intensity on the detector plane are proportional to the second derivative of the refractive index inside the capillary. The relationship between the magnitude of the refractive index change and the sample's concentration is approximately linear (*10*). Hence, the relative changes of probe beam intensity on the detector plane are also expected to be proportional to the second derivative of the sample's concentration inside the capillary. The signal peak corresponding to the focused zone of phosphorylase *b* and its integrals are illustrated in Figure 4, which clearly shows the second derivative characteristics of the detected signals. Thus, the two high peaks in Figure 2 are confirmed to correspond to the focused zones of phosphorylase *b* and ovalbumin by their second derivative nature and positions inside the capillary.

Since this imaging system is an on-line detector, the isoelectric focusing process can be monitored by this method. Figure 5 shows the focusing process of phosphorylase *b* and ovalbumin. The concentrations of the samples are 0.5 mg/mL, which correspond to 3.4 pmol of phosphorylase *b* and 7.2 pmol of ovalbumin injected into the 6.5 cm long square capillary. At the beginning (0 min) of the focusing, as shown in Figure 5a, no sharp peaks are observed. The detected signals are the probe beam intensity profile after it passes through the capillary. Many low peaks in Figure 5a are generated by re-

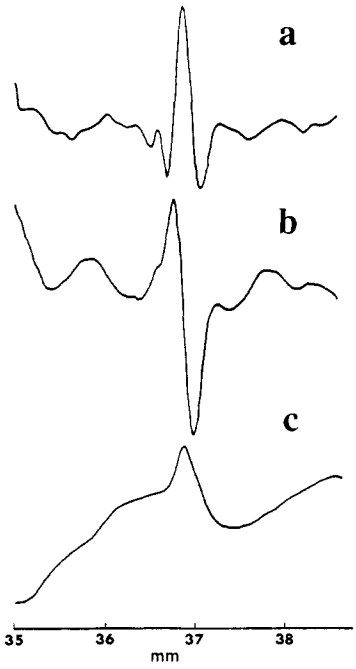

Figure 4. Focused phosphorylase b: (a) signal peak; (b) first integral of the peak; (c) second integral of the peak.

fractive index defects in the capillary wall or coating materials in the inner wall of the capillary, and their positions do not change with the time, which can be observed in Figure 5b and c. In figure 5b and c, two second derivative peaks appear and become higher with focusing time, which correspond to focused phosphorylase *b* and ovalbumin. In addition to these two high peaks, other small peaks can be observed and become higher with the time in Figure 5b and c. Those peaks are associated with the minor components in the samples. It should be mentioned that the concentration gradients generated by the components of carrier ampholytes can also be detected because of the universal nature of the detector (*14*). The refractive index fluctuations produced by the carrier ampholytes can be seen in the integral of the detected signals shown in Figure 4c. However, the second derivative nature of the imaging detector effectively reduces the amplitudes of low-frequency broad signals generated by the wide bands of the carrier ampholytes. As shown in Figure 2, high signal peaks can only be observed for high concentraction gradients produced at the boundaries of narrow protein zones (*10*, *14*). In addition, the second derivative nature of the signal will facilitate better resolution between peaks corresponding to different analytes (*16*).

In the above experiments, the probe beam intensity profile is measured by a scanning photodiode, and it takes more than 1 min for a single photodiode to measure the profile. This is a very inexpensive method, but it requires a mechanical driving device, which can introduce extra noise. Multielement detectors, such as a photodiode array, can eliminate the need for a driving mechanism since it is possible to read all the elements simultaneously. However, since the peak width on Figure 5 is ~300 μm, an expensive 512-pixel photodiode array is required to effectively monitor the focusing process in a 15-mm length of the capillary, as was done with the previous method. In our experiments, a low-resolution, 128-pixel photodiode array was used with which a 3-mm length of capillary could be monitored. Figure 6 shows the focusing process of α-chymotrypsin in this 3 mm length capillary monitored by the photodiode array, which demonstrates the compatibility of photodiode arrays for this imaging system.

The above results clearly indicate that the image system can be used as a on-line detector not only for detecting focused

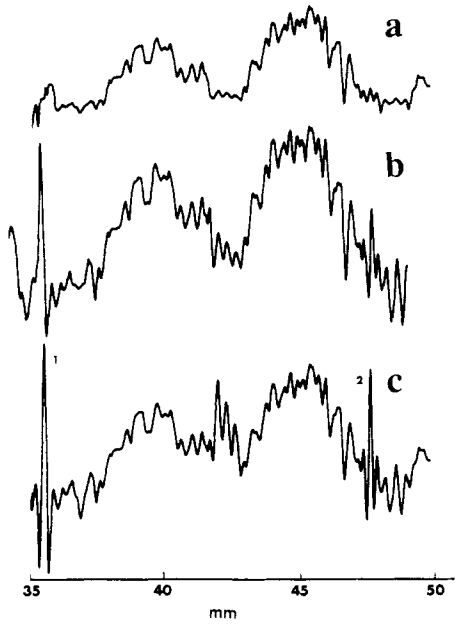

Figure 5. Focusing process of phosphorylase *b* (peak 1) and ovalbumin (peak 2) recorded by the image system with a scanning photodiode: (a) 0 min; (b) 2 min; (c) 6 min. Sample concentrations, 0.5 mg/mL.

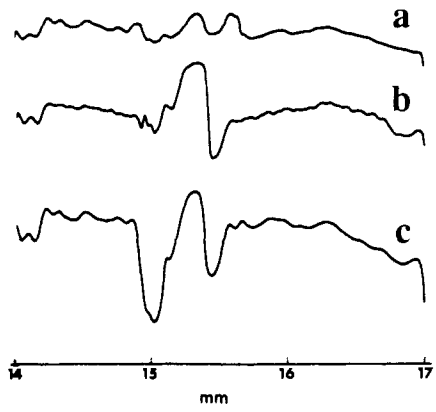

Figure 6. Focusing process of α-chymotrypsin recorded by a 128-pixel photodiode array: (a) 10 s; (b) 4 min; (c) 6 min.

analytes, but also for monitoring and studying the dynamics of the IEF process inside capillaries.

The use of an on-line detector greatly reduces the analysis time needed for the capillary IEF. By use of the proposed system, the separations and detection of micromolar-level proteins can be completed in 4–6 min, which is much faster than that needed by conventional capillary IEF instruments, typically, 20 min. In addition, the use of the imaging system will reduce the time needed for optimization of experimental conditions, such as focusing time and voltage. Those conditions can be adjusted rapidly in on-line fashion using a feedback loop and a computer algorithm which can analyze images. With the imaging system, pH calibration is substantially improved compared to the mobilization procedure which relies on the constant mobilization velocity assumption, which is often not valid in practical systems (*17*).

The imaging system can be further improved. A recently developed diode laser array, which can emit a 5 μm thickness and 5 cm width coherent light beam, can be applied as the probe beam source and will allow effective focusing into very narrow bore capillaries, which should improve sensitivity of the method (*14*). A high-resolution photodiode, such as a 1024-pixel photodiode array, can be used as the detector. Such an imaging system will allow analysis of proteins, which have p*I* ranging from 3 to 10, in 4–6 min. In addition to the ability

of on-line detection, the image system is also a universal detector and therefore allows detection of all analytes without tedious derivatization procedures.

The detection limits of this system of proteins can be estimated to be at the 10^{-6} M level from the signal to noise ratio in Figure 5c. Background correction methods will significantly improve the signal to noise ratio since the light scatter from refractive index defects inside the capillary causes the baseline fluctuations in the present system, as shown in Figure 5. In addition, the second-derivative Gaussian correlation filter could be used to more effectively differentiate random noise from the signal.

This imaging system can also be developed into a system for two-dimensional image detection, when a camera is used instead of a one-dimensional diode array. This arrangement will allow simultaneous monitoring of the separations in several capillaries. The future capillary electrophoresis instruments based on this principle will consist of a bundle of capillaries arranged side by side and detected, just as in the electrophoresis performed on gel slabs, by the two-dimensional image system. Such a system would allow analysis of many samples at the same time.

REFERENCES

(1) Righetti, P. G. *Isoelectric Focusing: Theory, Methodology and Applications*; Elsevier Press: Amsterdam, 1983.
(2) Jorgenson, J. W. *Anal. Chem.* **1986**, *58*, 743A-760A.
(3) Zhu, M.; Hansen, D. L.; Burd, S.; Gannon, F. *J. Chromatogr.* **1989**, *480*, 311-319.
(4) Kilar, F.; Hjerten, S. *Electrophoresis* **1989**, *10*, 23-29.
(5) Wehr, T.; Zhu, M.; Rodriguez, R.; Burke, D.; Duncan, K. *Am. Biotechnol. Lab.* **1990**, *8*, 22-29.
(6) Chan, K. C.; Koutny, L. B.; Yeung, E. S. *Anal. Chem.* **1991**, *63*, 746-750.
(7) Thormann, W.; Tsai, A.; Michaud, J.; Mosher, R. A.; Bier, M. *J. Chromatogr.* **1987**, *389*, 75-86.
(8) Thormann, W.; Mosher, R. A.; Bier, M. *J. Chromatogr.* **1986**, *351*, 17-29.
(9) Righetti, P. G.; Pagani, M.; Gianazza, E. *J. Chromatogr.* **1975**, *109*, 341-356.
(10) Pawliszyn, J. *Spectrochim. Acta Rev.* **1990**, *13*, 311-354.
(11) Pawliszyn, J. *Anal. Chem.* **1988**, *60*, 2796-2801.
(12) McDonnell, T.; Pawliszyn, J. *Anal. Chem.* **1991**, *63*, 1884-1889.
(13) Pawliszyn, J.; Wu, J. *J. Chromatogr.* **1991**, *559*, 111-118.
(14) Wu, J.; Pawliszyn, J. *Anal. Chem.*, preceding article in this issue.
(15) Merzkirch, W. *Flow Visualization*; Academic Press: New York, 1987.
(16) Grushka, E.; Israeli, D. *Anal. Chem.* **1990**, *62*, 717-721.
(17) Kilar, F. *J. Chromatogr.* **1991**, *545*, 403-406.

Jiaqi Wu
Janusz Pawliszyn*

Department of Chemistry
University of Waterloo
Waterloo, Ontario N2L 3G1, Canada

RECEIVED for review July 25, 1991. Accepted October 18, 1991. This work was supported by the Natural Sciences and Engineering Research Council of Canada. Donation of the high-voltage power supply by Beckman Instruments Inc. is appreciated.

Analytical Solution for Dispersion in Capillary Liquid Chromatography with Electroosmotic Flow

Sir: The relatively recent techniques of open-tubular capillary liquid chromatography (LC) (*1*) and capillary electrophoresis (CE), (*2, 3*) have both demonstrated a considerable potential for very efficient separation of highly complex mixtures, although some practical problems still remain to be resolved. The eluant flow in capillary LC is pressure driven, whereas that in CE is electroosmotic. Electroosmosis has also been proposed for capillary LC since it can provide substantially lower zone dispersion as compared with pressure-driven flows (*4, 5*). This is due to the considerably flatter velocity profile of electroosmotic flow as compared with the parabolic laminar velocity profile of pressure-driven flow. Thus, Pretorius et al. (*4*) and Tsuda et al. (*5*) obtained plate heights for unretained solutes that were from 10 to about 30 times smaller than the corresponding values for pressure-driven flow.

Martin and Guiochon (*6*) and Martin et al. (*7*) have developed the theory of axial dispersion in open-tubular capillary liquid chromatography with electroosmotic flow for the case of low ζ-potential, based on the approach of Golay (*8*) and Aris (*9*). However, for mathematical simplicity, they approximated the theoretical electroosmotic velocity profile (*10*) by empirical expressions and then obtained approximate analytical expressions for the plate height.

Our objective here is to provide a completely analytical solution for the plate height in capillary liquid chromatography with electroosmotic flow that is based on the *exact* analytical expression for the electroosmotic velocity profile for the case of small ζ-potential (*10*). The result is also applicable to the case of zone-spreading in CE for a neutral solute undergoing adsorption onto the capillary walls. The expression agrees well with the numerical results of Martin and Guiochon (*6*) and Martin et al. (*7*) and reduces appropriately to the expression for plate height in CE for a neutral solute without any wall interaction (*11, 12*).

THEORY

Some of the assumptions involved in the derivation are enumerated by Datta and Kotamarthi (*11*). The plate height, H, takes the following form with the assumption of negligible resistance to mass transfer in the stationary phase:

$$H = \frac{2D_i}{\langle v_z \rangle} + C_m \frac{a^2 \langle v_z \rangle}{D_i} \quad (1)$$

where $\langle v_z \rangle$ is the cross-sectional average velocity in the axial direction, z, D_i is the solute diffusion coefficient in the mobile phase, a is the capillary radius, and C_m is a dimensionless coefficient, dependent on the form of the velocity profile of the eluant, for the term representing the resistance to mass transfer in the mobile phase. For the parabolic velocity profile of Poiseuille flow resulting from a pressure-gradient, C_m is given by the well-known Golay equation (*8*). In general, for a given velocity profile, C_m may be obtained by evaluating the following expression (*6*), based on the generalized dispersion theory of Aris (*9*):

$$C_m = A_1 - \frac{2A_2}{(1 + k'_i)} + \frac{1}{4(1 + k'_i)^2} \quad (2)$$

where k'_i is the column capacity factor for the solute i and the definite integrals A_1 and A_2 are given respectively by

 © 1992 American Chemical Society